mm [inch]

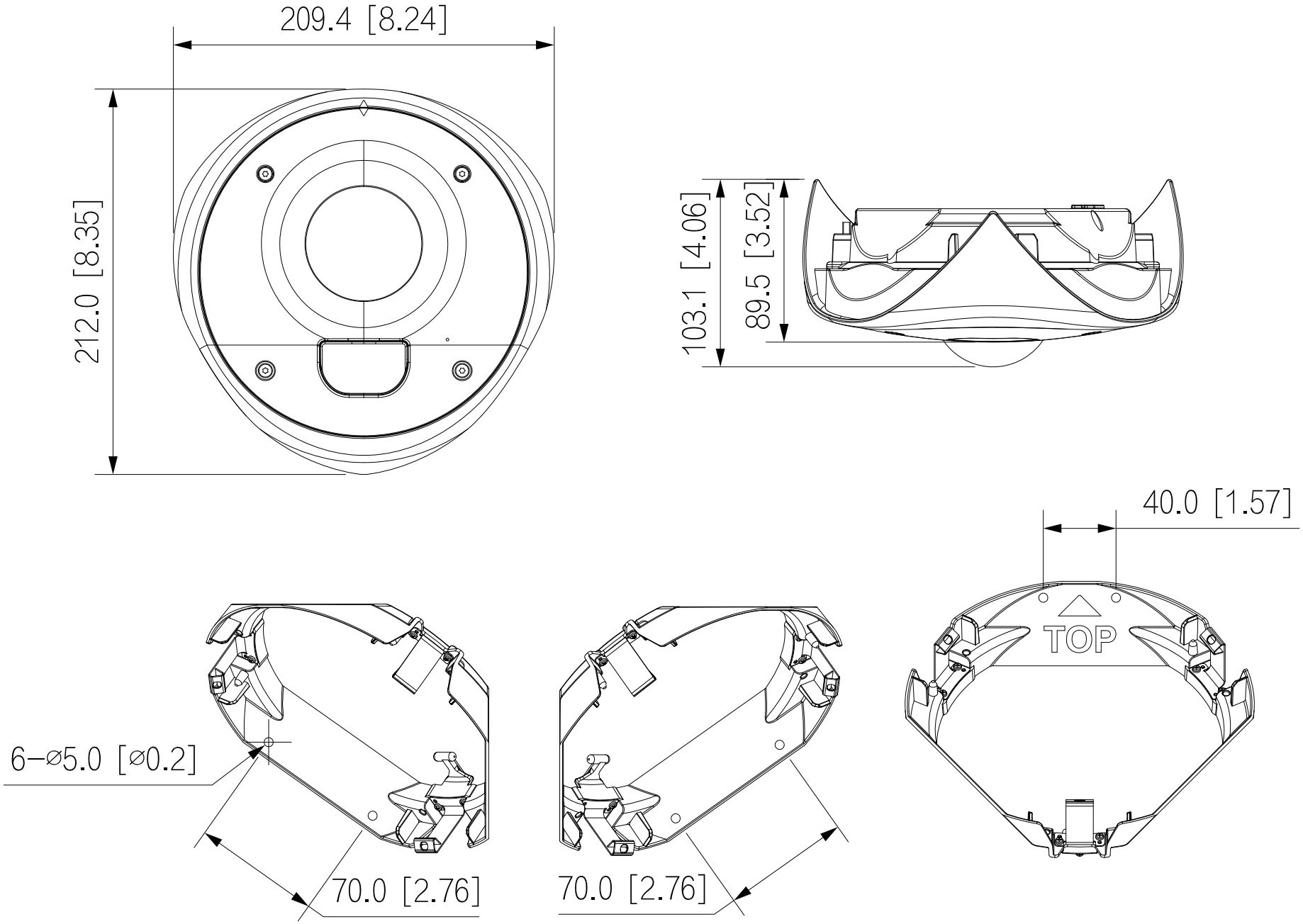
209.4 [8.24]
212.0 [8.35]
103.1 [4.06]
89.5 [3.52]
40.0 [1.57]
TOP
6−⌀5.0 [⌀0.2]
70.0 [2.76]
70.0 [2.76]