mm [inch]

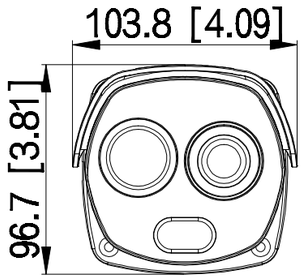
103.8 [4.09]
96.7 [3.81]

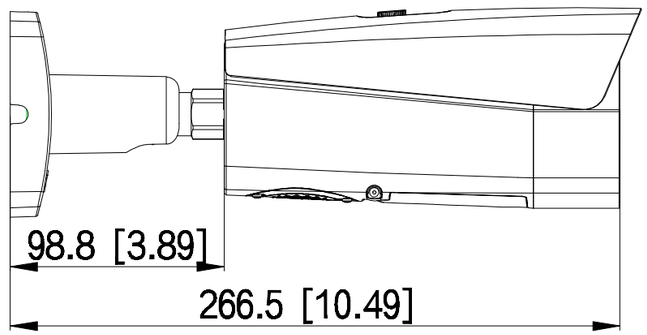
98.8 [3.89]
266.5 [10.49]

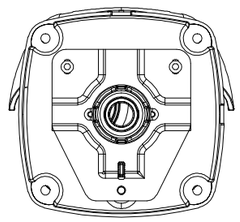

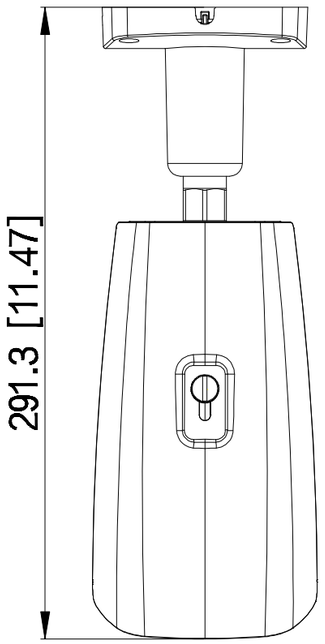
291.3 [11.47]

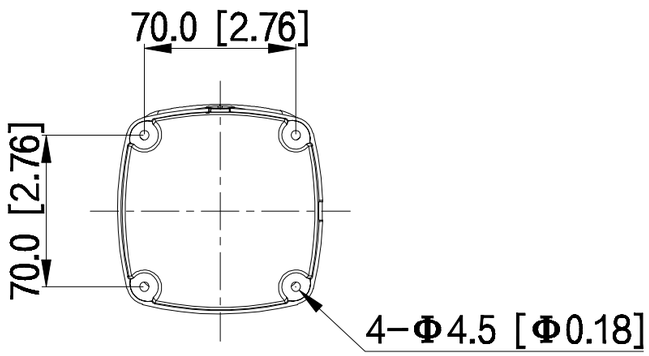
70.0 [2.76]
70.0 [2.76]
4−Φ4.5 [Φ0.18]