mm [inch]

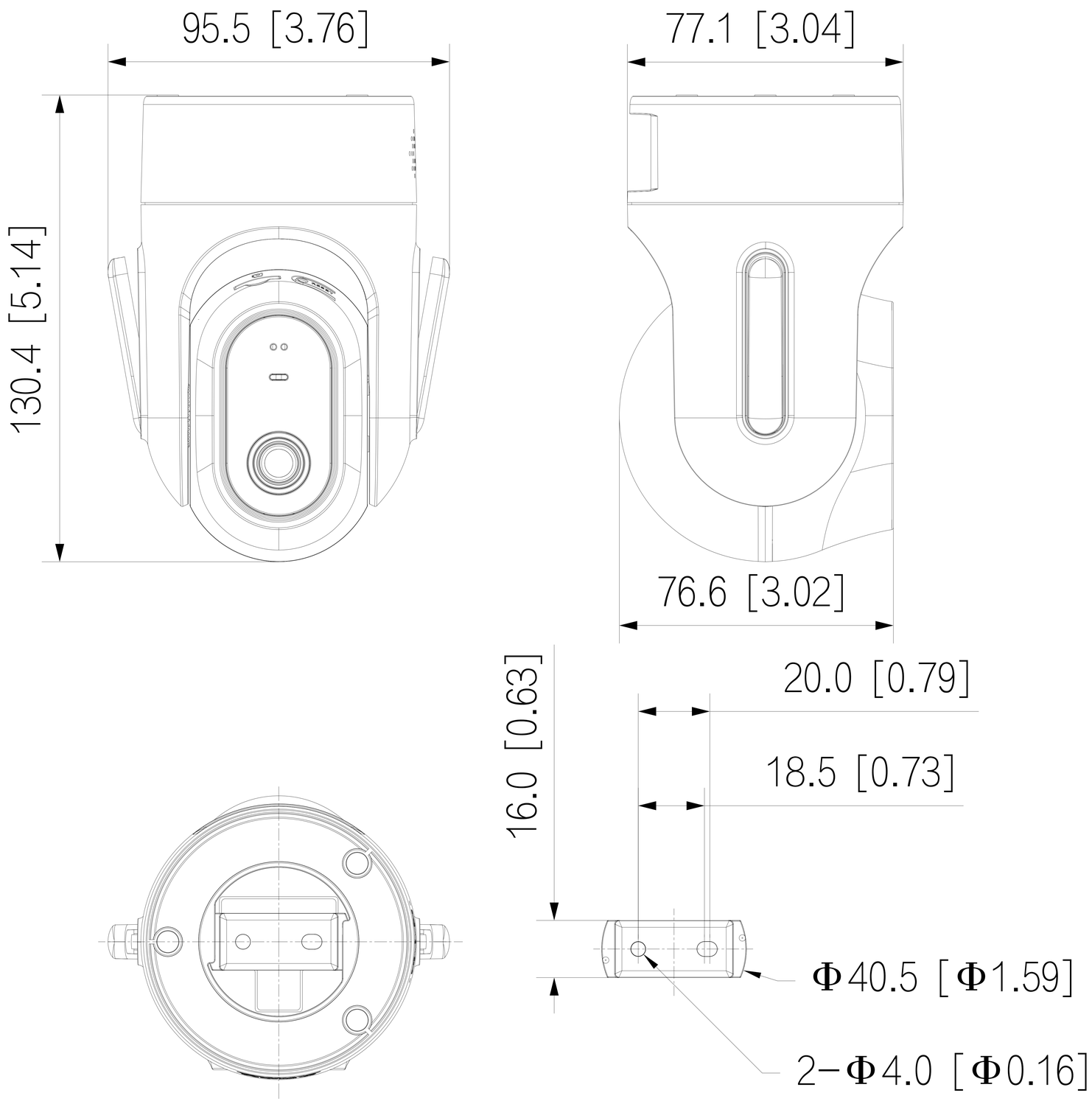
95.5 [3.76]
130.4 [5.14]
77.1 [3.04]
76.6 [3.02]
16.0 [0.63]
20.0 [0.79]
18.5 [0.73]
Φ40.5 [Φ1.59]
2−Φ4.0 [Φ0.16]