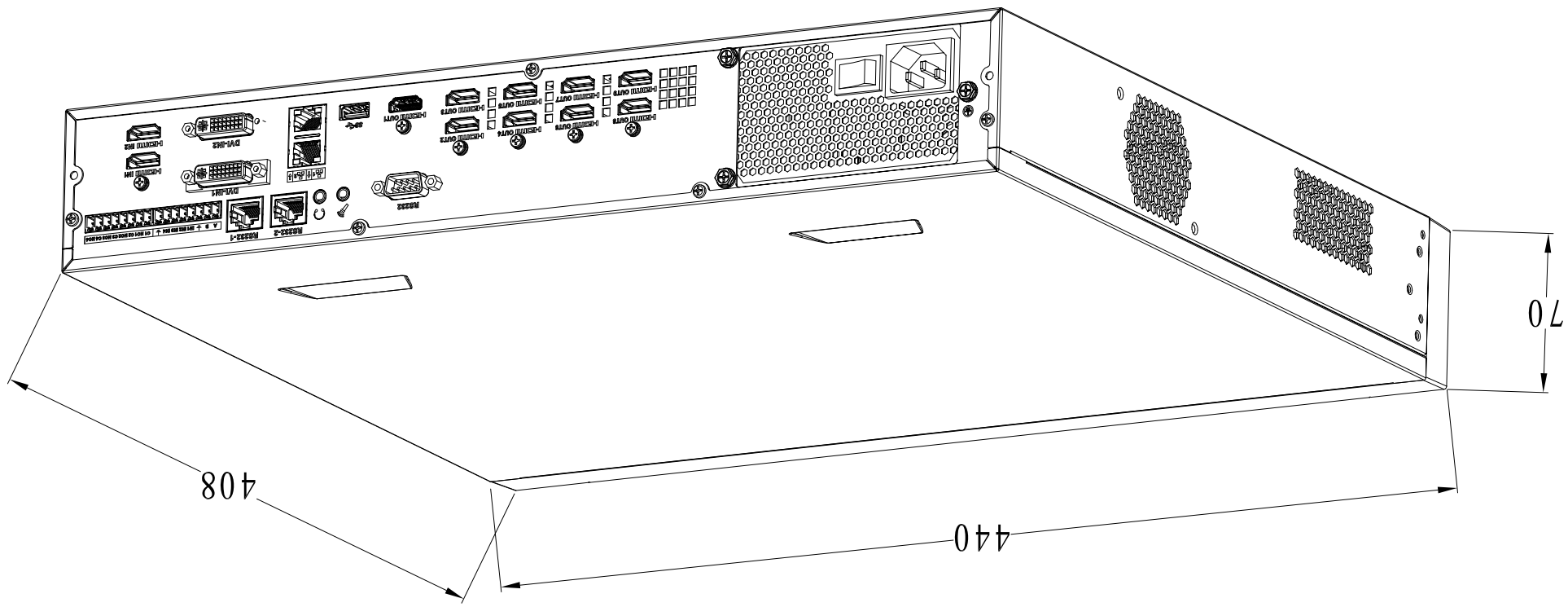

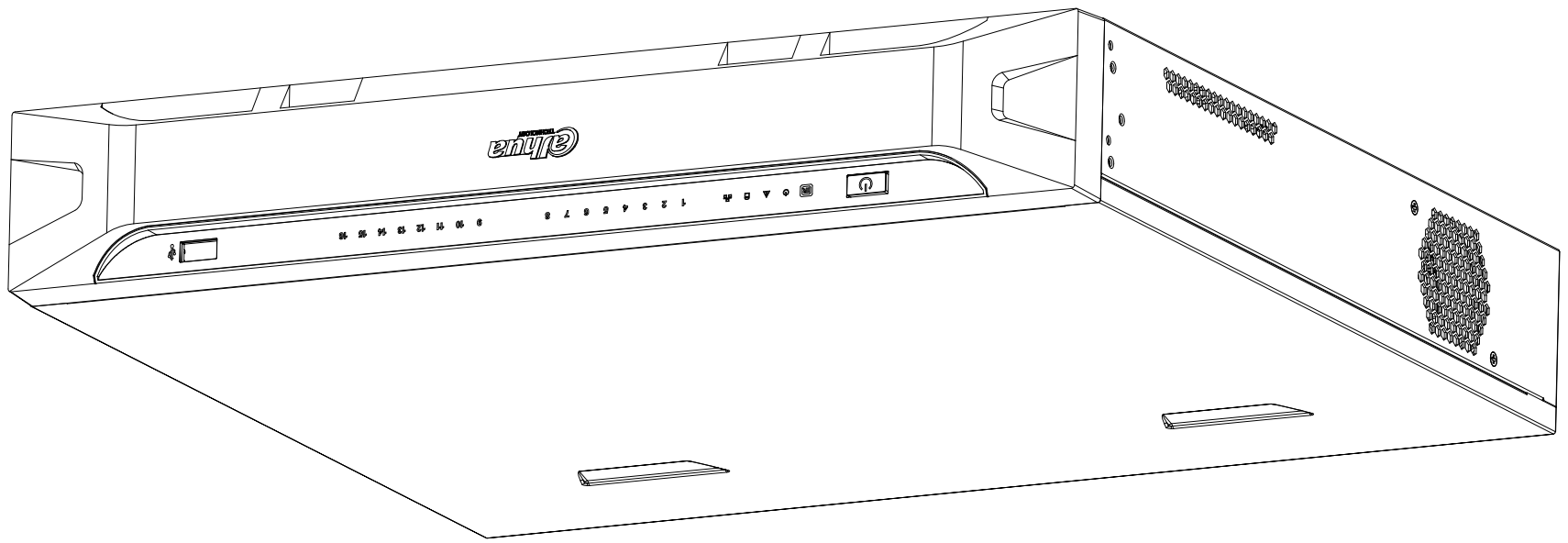

REVISIONS				
REV	ZONE	MARK	DESCRIPTION	DATE	CHANGED

.X	±0.2				
.XX	±0.15				
.XXX	±0.05	ANG	±0.5	DRAW.	肖敏宏
CHEK.	李俊	DATE.	2016-08-10	UNIT:mm	
SCALE:4:5					
STAN.		DATE.		MATL.B01	MASS(g):555?321.
APPR.	梅丽丽	DATE.	2016-08-10	SHEET.1 OF 1	

TITLE: 9路4K解码器

DHJ-X263-0000

DWG NO.:

PART NO.:

RELEASE LEVEL: &PROJ_RELEASE

FILE NAME: DHJ-X263-0000